Pirate Shift

Based on:
Deluxe Pirate Pitch by Mid-Fi Electronics
Effect type:
Chorus/Vibrato
Build difficult:
Intermediate

Amount of parts:
Average, total 50 components
Technology:
Vactrol/photoresistor
Power consumption:
9V

Enclosure type:
125b
Get your board at:
Pirate Shift
Get your kit at:
Das Musikding (Europe)

Project overview:

The Pirate Shift is a Chorus/Vibrato merged with a PT2399 based delay. It also has the ability to modulate over an octave as well as control the waveform of the modulator, giving you a huge range of tonal options. It works from a standard chorus to a crazy modulation device.

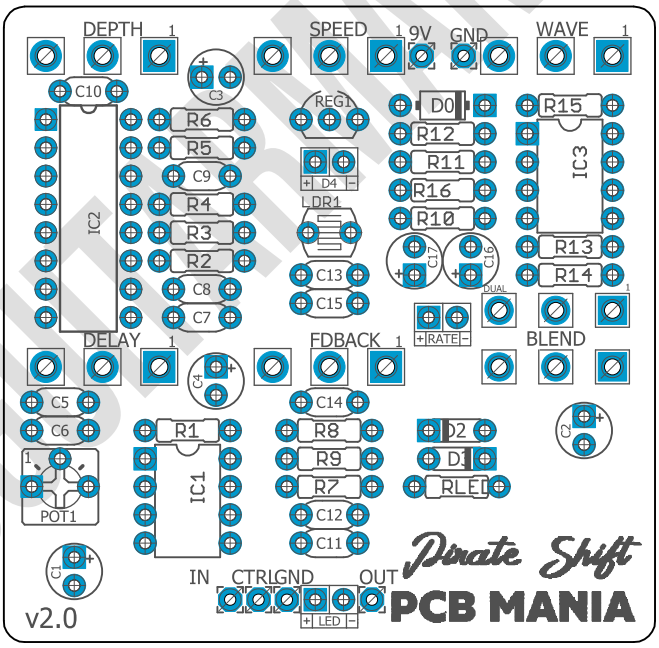

Index

Introduction

Ahoy! The Pirate Shift is about to embark in search of the most fantastic modulation sounding! I see no fear in your eyes. Hop on the boat then and join us in this adventure.

Our board has the perfect delay, chorus, and vibrato combination and six user-friendly controls, Delay Time, Feedback, Depth, Speed, Wave, and Blend, that will allow you to navigate the briny deep of sounding with the ultimate versatility.

With the ability to be used as a standalone delay, chorus, or pitch vibrato, the Pirate Shift can be relentlessly tweaked and shaped to provide you with whatever modulation needs your heart desires.

Controls

- Speed
- Wave
- Delay
- Depth
- Feedback
- Blend

Bill of materials

Resistors	
Part	**Value**
R1	1k
R2	22k
R3	10k
R4	22k
R5	22k
R6	10k
R7	100k
R8	100k
R9	15k
R10	10k
R11	10k
R12	1k
R13	47k
R14	100k
R15	10k
R16	10k

Capacitors	
Part	**Value**
C5	100nf
C6	100nf
C7	100nf
C8	100nf
C9	1nf
C10	1nf
C11	10nf
C12	100nf
C13	100nf
C14	100nf
C15	100nf

Capacitors Electrolytic	
Part	**Value**
C1	47UF
C2	47UF
C3	47uf
C4	47uf
C16	1uf
C17	47uf

Potentiometers	
Part	**Value**
SPEED	B1m
WAVE	B1k
DELAY	B100k
DEPTH	B100k
FDBACK	B50k
BLEND	B50k Dual gang (stereo)
Trimmer	100K

Diods	
Part	**Value**
D1	1N4001
D2	1n4148
D3	1n4148
D4	**LED5MM***
D5	LED3MM

Semiconductors	
Part	**Value**
IC1	LM386
IC2	Pt-2399
IC3	JRC 4558
REG1	**Lm78L05****

Photo resistor/ Photo coupler*	
Part	**Value**
LDR1	VTL5C2

Shopping list

Resistors		
Qty	**Value**	**Parts**
1	47k	R13
3	22k	R2, R4, R5
1	15k	R9
2	1k	R1, R12
6	10k	R3, R6, R10, R11, R15, R16
3	100k	R7, R8, R14
1	5mm Photo resistor	LDR1

Capacitors		
Qty	**Value**	**Parts**
8	100nf	C5, C6, C7, C8, C12, C13, C14, C15
2	1nf	C9, C10
1	10nf	C11

Electrolytic Capacitors		
Qty	**Value**	**Parts**
1	1uf	C16
2	47UF	C1, C2
3	47uf	C3, C4, C17

Semiconductors		
Qty	**Value**	**Parts**
1	LM386	IC1
1	JRC 4558D	IC3
1	Pt-2399	IC2
1	**LM78L05****	REG1

Potentiometers		
Qty	**Value**	**Parts**
1	100K	POT1
2	B100k	DELAY, DEPTH
1	B1k	WAVE
1	B1m	SPEED
1	B50k	FDBACK
1	B50k **Stereo**	BLENDA, BLENDB,

Diodes		
Qty	**Value**	**Parts**
2	1n4148	D2, D3
1	1n4001	D1
1	Led 3mm	D5
1	**Led 5mm***	D4

Photo resistor/ Photo coupler*		
Qty	**Value**	**Parts**
1	**VTL5C2**	**LDR1**

Schematic

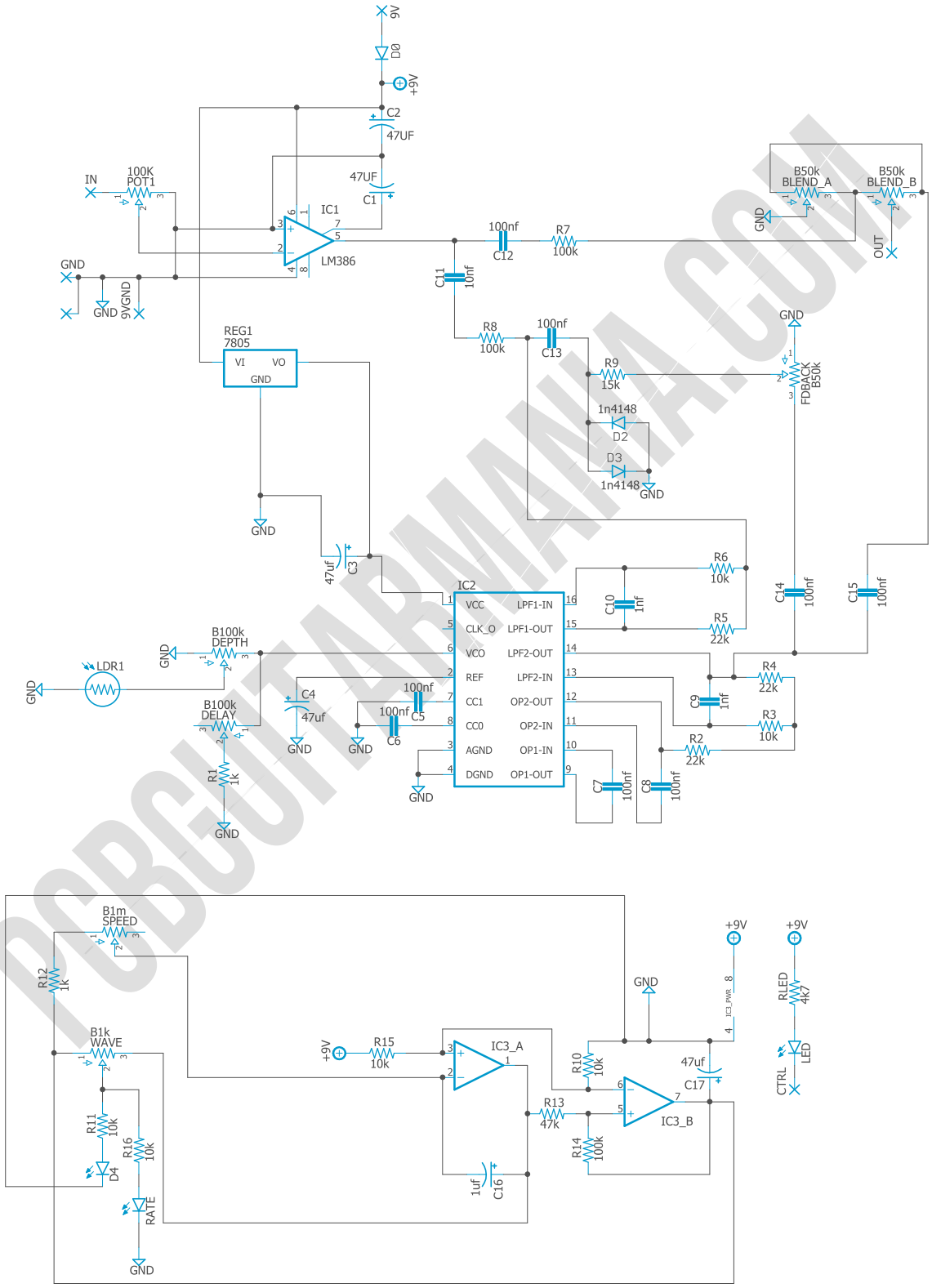

Components Recommendations

As many people like to experiment with some pedals with higher voltage, always ensure your **electrolytic capacitors'** max tolerance is over 25v.

This board has been tested using Film box capacitors for most of the values over 1nf and ceramics discs for those under 1nf. However, high-quality components such as Wima's Capacitors and Panasonic's electrolytics can deliver a better performance.

All the resistors used for testing this project are 1/4W Metal Film.

The BOM and Shopping list are exclusive regarding this project. It doesn't include all the hardware like the 3PDT bypass switch, audio/dc jacks, enclosure, etc.

Build Notes

If this is one of your first projects, I recommend you to take a look at our Pedal Building Guide.

For a successful and tidy build, it's recommended the following order:

1. Resistors & diodes
2. Capacitors, starting with the smaller ones and the ceramic ones.
3. Electrolytic capacitors (always check the polarity)
4. Transistors
5. Wires
6. Potentiometers and switches
7. Off-board wiring

Photo resistor/ Photo coupler *
The project features two different alternatives here, the stock version using a **VTL5C2** photo coupler, or to build your own with a 5mm led facing a photo resistor like the **KE-10720** inside a piece of heat-shrink tube. The home-made alternative brings you the opportunity to customize much more the LFO of the effect just by changing the led color, brightness or even the distance in between the led and the photo resistor.

Lm78L05**
It's recommended, in order keep the project tidy, to get this part on a To-92 package (the one that looks like a standard transistor). The TO-220 will work great also, but some people might find it too big.

Wiring Diagram

All our projects include a free 3PDT Board to make the wiring easier and tidier. Also, all of our PCBs feature the status LED on board.

The pad named “Ctrl” or “LED” is the one that controls the status of the led; wire it to the “LED” pad on the 3PDT board or in the control slug of your 3PDT.

This board has been designed to match our EZ 3PDT PCB; check it here to access our Pedal Wiring Guide.

Drill Template

This Project has been planned to fit into a 125b enclosure type.

Check the Attached “Drilling templates” to drill the box properly. The files are on Scale 1:1, ready to print on an A4 page.

Offboard Wiring

There are two wires going from the control pin of the 3pdt to the board. One is to control the status LED, and the other one is to control the internal LED, the one that controls the modulation and the photo resistor.

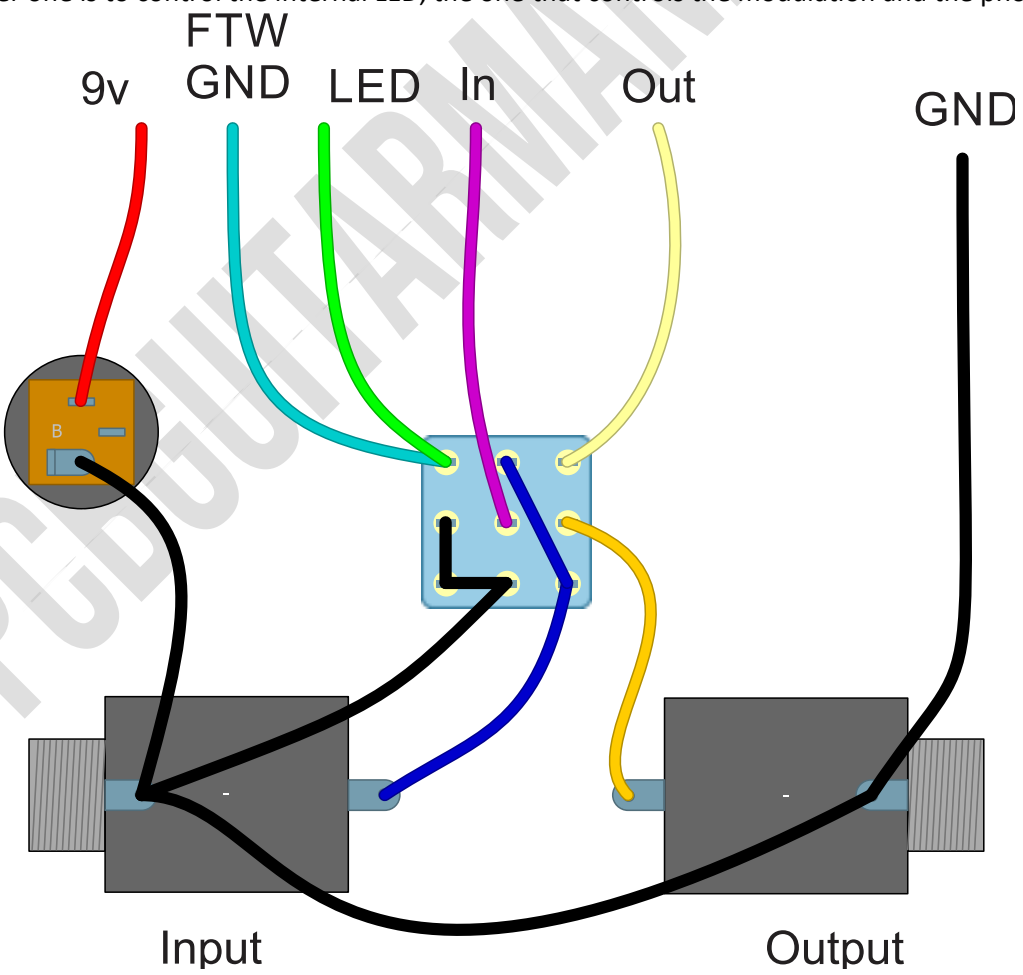

Licensing and Usage

We really appreciate your trust and support in buying this PCB, as well as your will to dive into the DIY electronics world. For us, that's why you can make this project work properly and enjoy not only the building process but also experiment and play with it on your rig.

We try to reply to every question we receive on our email or our social media. Still, we try to encourage all our customers to join our PCB Guitar Mania – Builders Group on Facebook to post all your doubts, issues, suggestions, or requests, share your builds, and have some feedback from other fellow builders and us!

We tested all our projects following this same guide on their standard configurations. Although, not all of the variations and mods have necessarily been checked. These are suggestions based on the schematic analysis and the experiences and opinions of others. Feel free to share with us your views and recommendations regarding the mods your personal experimentation.

These boards may be used for commercial endeavors in any quantity unless expressly noted. No attribution is necessary, though accreditation or a link back is always much appreciated.

If you are a builder planning to make your own run of pedals, we also offer the service of custom-made boards with your brand and logo, design according to your specifications.

The only usage restrictions are that, first, you cannot resell the PCB as part of a kit without prior arrangement with us, and second, you cannot scratch off the silkscreen or other way of trying to hide our logos and the source of the PCBs. Like it's written above, if you want to have your designs with your brand and logo, we could undoubtedly reach an agreement.

Follow us on Instagram and Facebook to stay in tune with the latest projects!