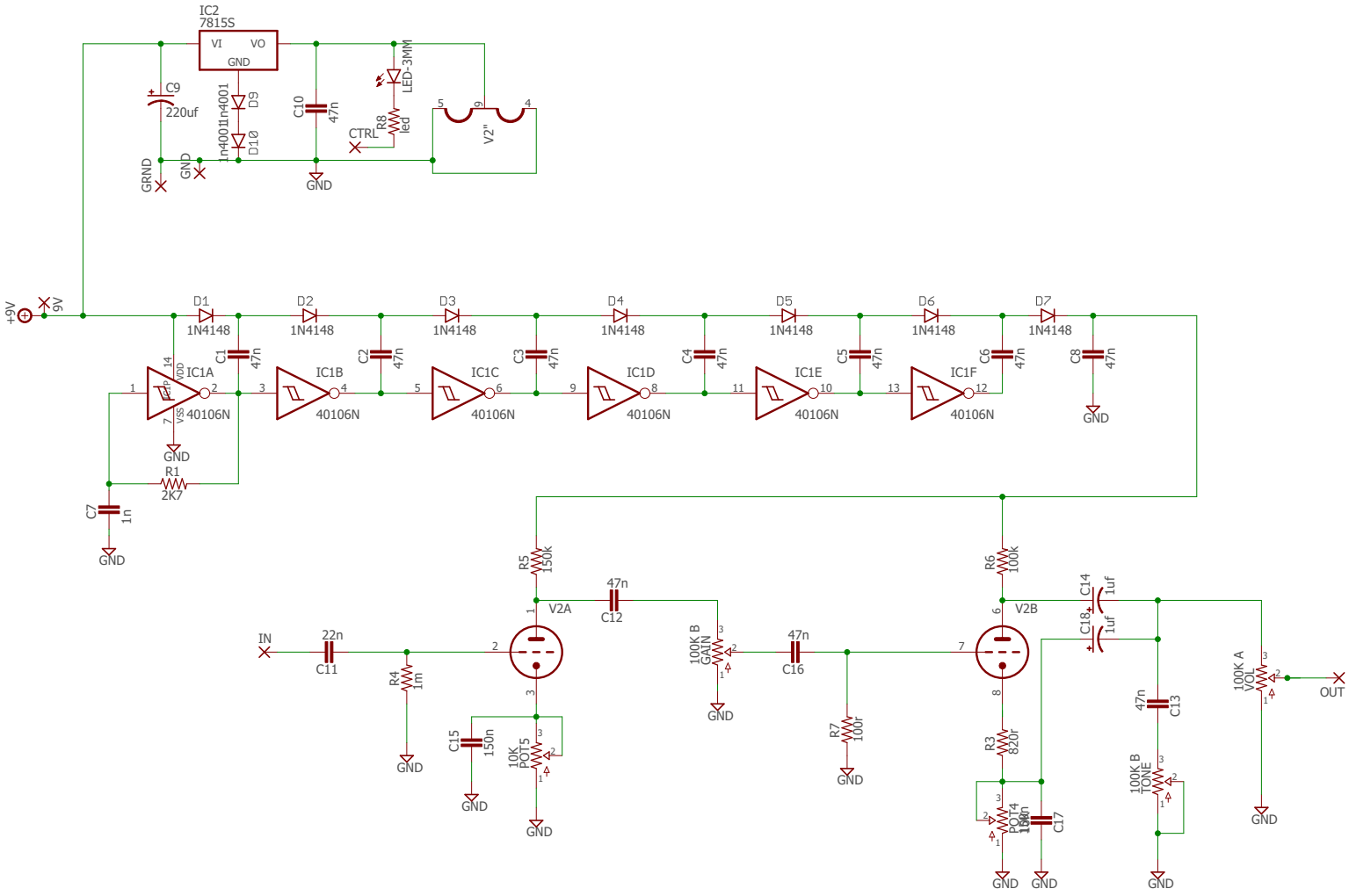
IC2
7815S
VI
VO
GND
C9
220uf
1n4001
D9
D10
C10
47n
LED-3MM
R8
led
CTRL
V2"
GRND
GND
+9V
9V
D1
1N4148
D2
1N4148
D3
1N4148
D4
1N4148
D5
1N4148
D6
1N4148
D7
1N4148
C1
47n
C2
47n
C3
47n
C4
47n
C5
47n
C6
47n
C8
47n
IC1A
IC1B
IC1C
IC1D
IC1E
IC1F
40106N
VDD
VSS
R1
2K7
C7
1n
R5
150k
R6
100k
V2A
V2B
47n
C12
IN
22n
C11
R4
1m
C15
150n
10K
POT5
100K B
GAIN
47n
C16
R7
100r
R3
820r
C14
1uf
C18
1uf
47n
C13
100K B
TONE
100K A
VOL
OUT
C17